SET UP 9bb Team Edition TE

SERPENT

1ST	SPUR	2ND

48T	49T	50T	44T	45T	46T
✓				✓	

1ST	PINION	2ND

15T	16T	17T	18T	19T	20T
✓				✓	

CENTAX

CLUTCHBELL — ALU ✓ — STEEL ☐

CLUTCHSHOE — BLACK ✓ — YELLOW ☐ — RED ☐

SHOCK ABSORBERS

FRONT		REAR
OIL: 500 CST		OIL: 600 CST
SPRING: Green	OPEN / CLOSED	SPRING: Red

ANTI-ROLL BARS WIRE 2.7 Ø

0°	30°	45°	60°	90°	0°	30°	45°	60°	90°
✓									

LEFT	RIGHT	TYRES	LEFT	RIGHT
MATRIX	MATRIX	MAKE	MATRIX	MATRIX
32 °	32 °	SHORE	35 °	35 °
67 mm	67 mm	DIAMETER	74 mm	74 mm
mm	mm	5-MIN WEAR	mm	mm

ENGINE	Max Power		
VERSION	XL9 Tq	HEADSHIMS	0.6 mm
GLOWPLUG	MAX 6	CARB DIA	mm
EXHAUST	Nova 2015		
FUEL			25 %

BODY TYPE: Protoform R18

BUMPER HOLES CUT: YES ✓ NO ☐

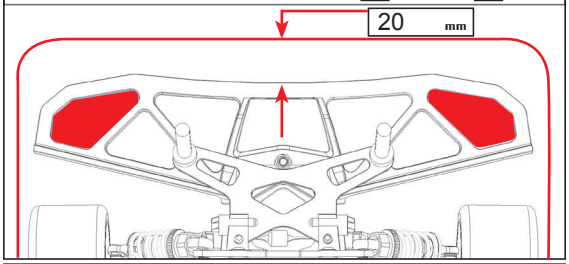

STIFFENERS

RIGHT SIDEPLATE: YES ☐ NO ✓

CARBON ☐ YES ✓ NO

LEFT SIDEPLATE: YES ✓ NO ☐

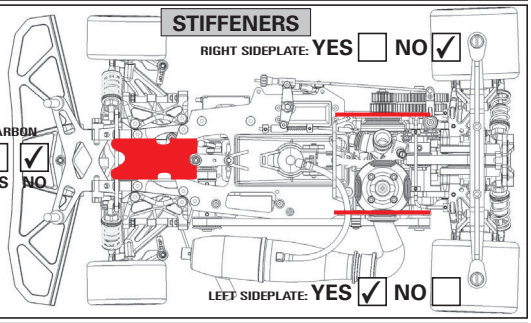

REMARKS

Steering rods under the steering block arm.

RACE	3rd Round Spanish Nats	DATE	1-7-2012
TRACK	Puerto de Santa María (Cádiz)	RESULT	2
SURFACE:	✓ ASFALT ☐ OTHER SPECIFY	QUALIFYING POSITION	2
LAYOUT:	✓ TECHNICAL ☐ MIXED ☐ FAST	QUALIFYING TIME	25 v 7:07
TRACTION:	✓ LOW ☐ MEDIUM ☐ HIGH	FINAL POSITION	2
TRACK TEMP	35	AIR TEMP	30

FRONT ● ✓ APPLIED REAR

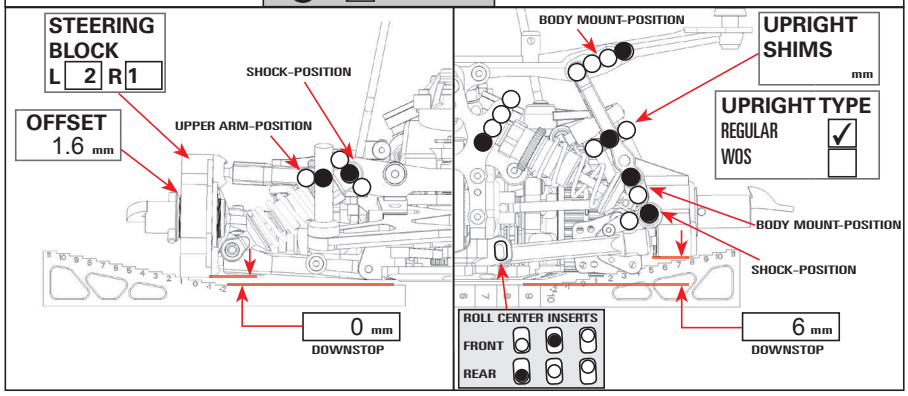
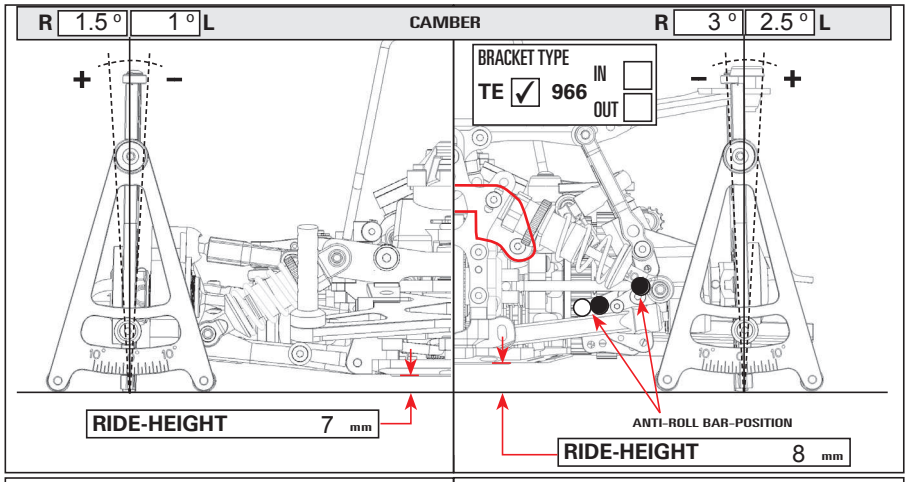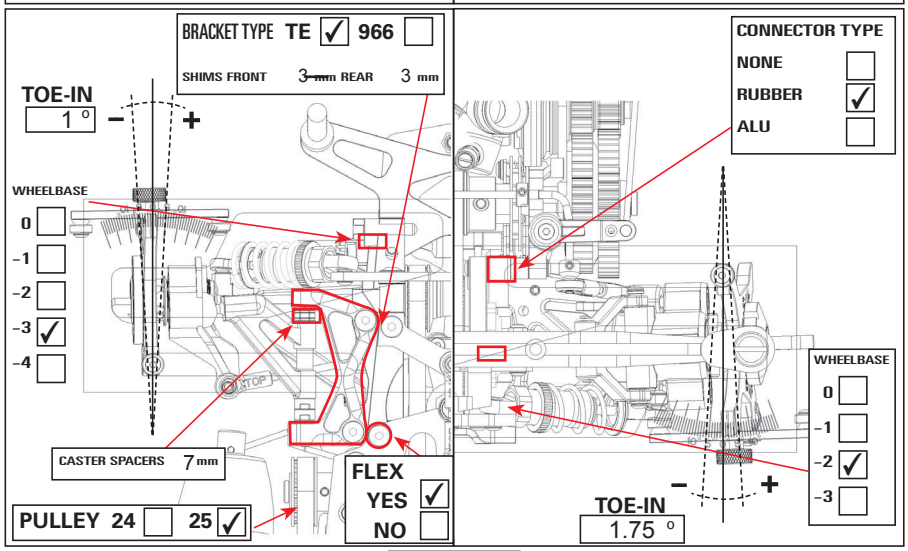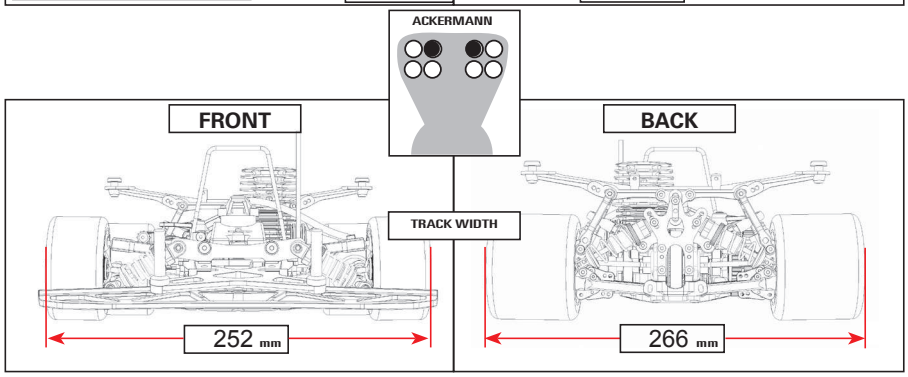
R 1.5 ° 1 ° L — CAMBER — R 3 ° 2.5 ° L